Measuring relay

SMU - Phase measuring relay / under voltage with 1 Changeover

11.25mm housing

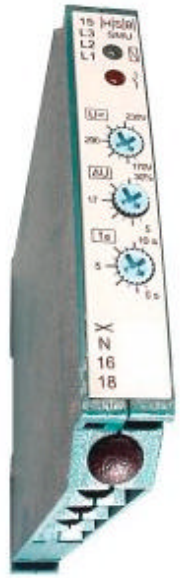

Application

Measures three-phase systems for under voltage and phase failure.

Description

The **SMU / under voltage** measures three-phase current systems for under voltage and phase failure. The relay is powered by the connection to the phase L1(L1 – N > 170V AC). Additionally, the star point (neutral) of the measuring phases must be connected. The green LED indicates the connection of the power supply.

Function

If all three phases exceed the selected response value plus hysteresis (normal situation), the relay immediately switches into its operating position (relay energizes). This is indicated by the red LED. If at least one of the three phases falls below the drop-out value then the relay returns to its rest position. The response time of the relay can be set between 0 and 10 seconds and the hysteresis tolerance between 5 and 30%. The SMU senses the phase angle and will also switch off if the user generates a back feed.

Options

Other time settings, hysteresis tolerance and measuring ranges available upon request.

Part number

012001	**SMU three-phase measuring relay** **Under voltage / 1 Changeover** **Range: L – N 170 – 230V AC**

Approvals

CE

Function diagram

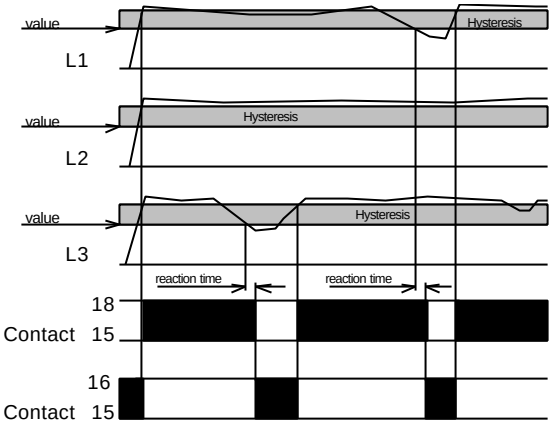

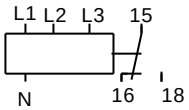

Mounting

Snap-on mounting using a standard DIN rail EN 50022. The unit is designed to allow side-by-side mounting, with an ambient temperature of < 60°C.

HSB Industrieelektronik GmbH
Riemenschneiderstraße 2
97708 Bad Bocklet – Steinach

Tel.: 0049 97 08 / 70 70 7-0
Fax.: 0049 97 08 / 70 64 40

E-mail: info@hsb-electronics.de
Internet: www.hsb-electronics.de

Measuring relay
SMU - Phase measuring relay / under voltage with 1 Changeover
11.25mm housing

Technical data

Supply

Supply voltage:	3 x 400V AC / N
Frequency range:	50 ... 60Hz
Power consumption:	8 VA
Operating mode:	continuous

Adjustment range

U < :	170...230V AC
ΔU :	5...30%
t_v :	0...10s
Measuring accuracy:	2% over the entire temperature and voltage range
Repetitive accuracy:	± 2%

Operation indicators

Supply voltage:	LED, green
Relay in work position:	LED, red

Contact

Number of changeovers:	1
Contact material:	$AgSnO_2$
Maximum switching voltage:	250V AC
Maximum switching current:	4A
Drop-off time of switching element:	approx. 20ms
Mechanical life:	30 Mio.
Electrical life (with rated load):	0.8 Mio.

General data

Ambient temperature:	- 25 ... + 60°C
Climate resistance:	VDE 0435T.2021
Mounting position:	any
Vibration resistance:	VDE 0435T.2021
Test voltage:	2.5kV
Isolation group:	VDE 0110 Group C 250
Protection class:	Terminals IP 20 Housing IP 40
Connection terminals:	Crosshead screws; M3.5 self opening
Connection cross section:	Multi-strand wire with wire sleeves 2 x 2.5mm² single wire 2 x 2.5mm²
Finger touch protection:	VDE 0106T.100 and VBG4
Mounting:	Symmetrical DIN rail EN 50022
Dimensions l x w x h:	78mm x 11.25mm x 110mm
Weight:	77g

Example

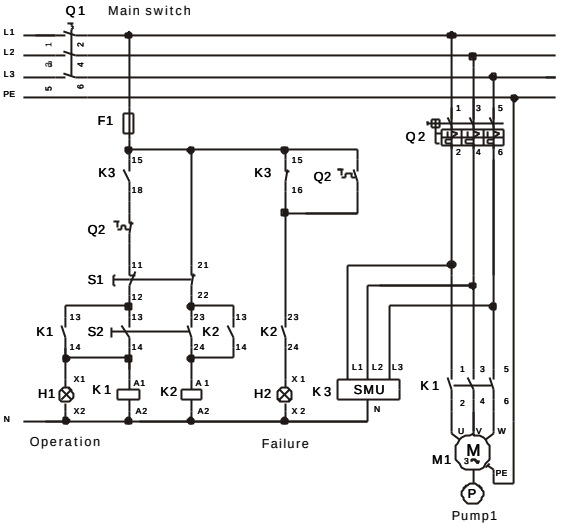

The SMU measures a pump motor for under voltage and phase failure.

Dimensions

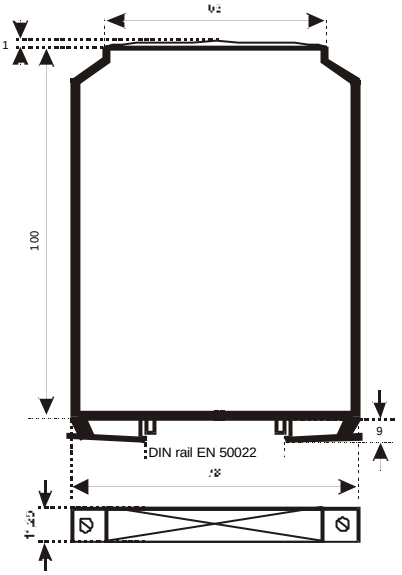

Connections

The terminal assignment for the connections is located on the front panel of the relay. **Reading the front panel from top to bottom**, the connections are in the following order:

LED side:	L1 – L2 – L3 - 15
Potentiometer side:	nc – N – 16 – 18

HSB Industrieelektronik GmbH
Riemenschneiderstraße 2
97708 Bad Bocklet – Steinach

Tel.: 0049 97 08 / 70 70 7-0
Fax.: 0049 97 08 / 70 64 40

E-mail: info@hsb-electronics.de
Internet: www.hsb-electronics.de